ENGINE, DIPSTICK AND OIL FILTER - Z26NEY99A4/B4/A6/B6 (C702862)

2026 RZR - RZR XP S 1000 ULTIMATE (R01) - Z26NEY99A4/B4/A6/B6

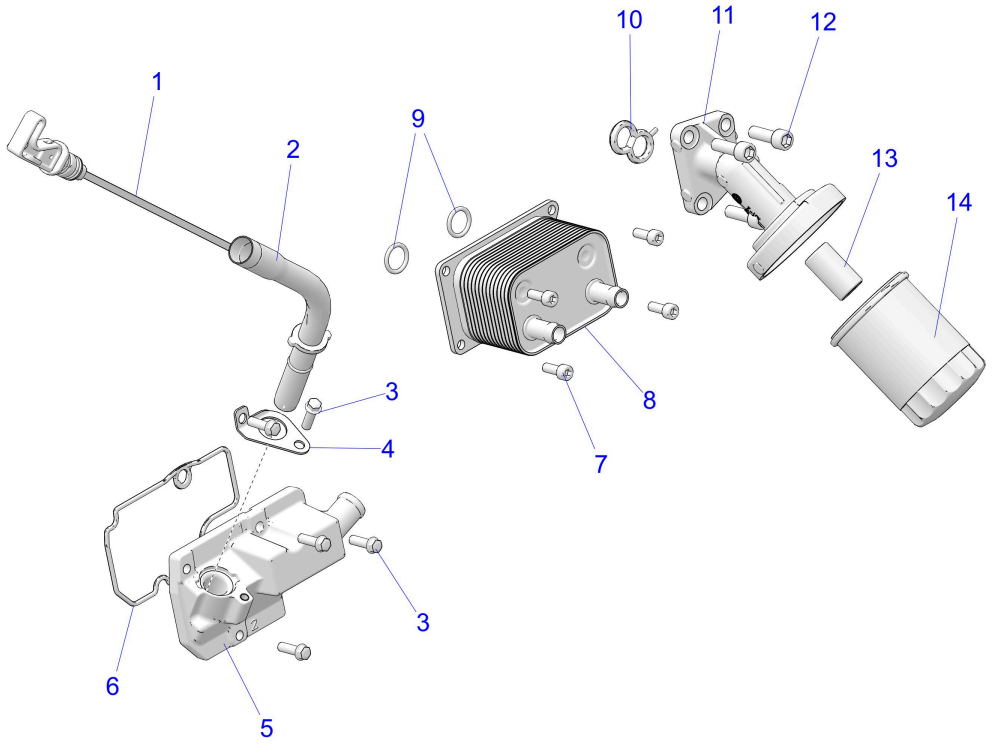

© 2021 Polaris Industries Inc.

C702862

Reference #	*Part#*	*Description*	*Quantity*
1	3023488	ASM-DIPSTICK	1
2	1204547	ASM-OIL FILL TUBE [INCL. O-RING]	1
2	5414047	O-RING, 12MMX2MM	1
3	7518576	SCREW-HXFL-M6X1.0X20 8.8 ZY3	5
4	5255453	BRACKET, TUBE, OIL FILL, LOWER	1
5	5145394	COVER-BREATHER,MACH	1
6	5815811	SEAL-COVER,BREATHER	1
7	7519303	SCREW-SH-M6X1.0X16 8.8 ZPY D204	4
8	1240820	COOLER, OIL TO WATER, 7	1
9	5413837	O-RING,.612X.818X.103	2

10	3610348	SEAL-FILTER ADAPTER-3HOLE	1
11	5142156	ADAPTER-OIL FILTER, MACH	1
12	7518142	SCR-SH-M8X1.25X25 8.8 ZPC NYL	3
13	2521530	ADAPTOR-FILTER,STRAIGHT	1
14	2540086	FILTER-OIL (10 MICRON)	1
14	2522485	FILTER-HD,OIL [HD OPTION]	1

Copyright 1996-2026 Polaris Industries U.S.A All rights reserved.